TNT15

ADVERTISING TENT CANOPY

10' x 15' TENT - SCALE: 2:1

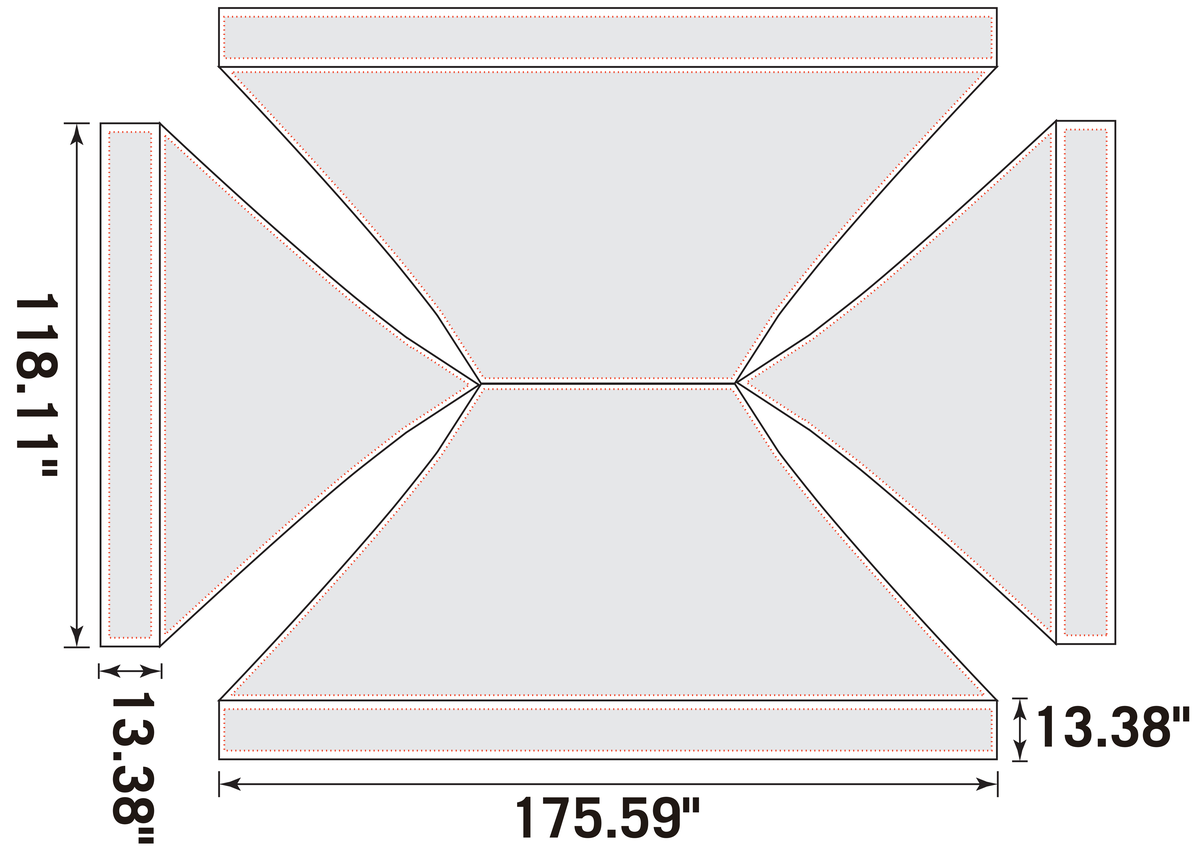

IMPORTANT!

PLEASE READ BEFORE SUBMITTING ARTWORK

- Keep your design within the ART layer only.
- Fill Bleed with artwork. Needed for finishing.
- DO NOT hide, delete or rename other layers.
- DO NOT resize template and/or change size or shape.
- Keep all important artwork inside the Safe Zone.
- Convert all text to outlines.
- Embed all links or provide links separately.
- Use Pantone Solid Coated Colors to ensure the best color matching. Final output will be in Solid Uncoated Colors.
- Use CMYK for gradients.
- Save and send file as PDF.